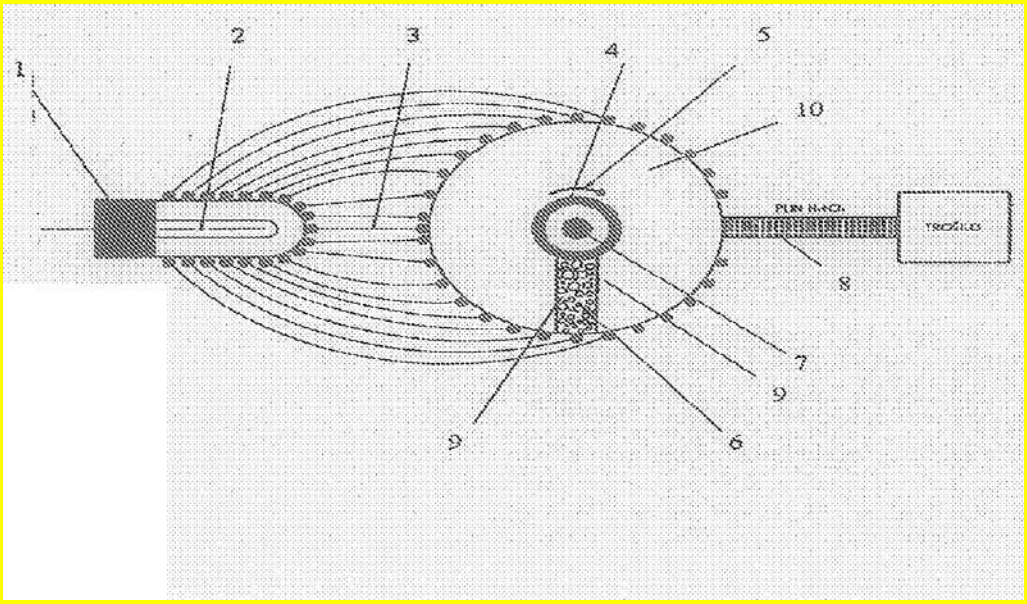

DEVICE AND METHOD FOR SPLITTING WATER

Project title	Device and method for splitting water
Sector	Innovation sector
Location	Bosnia and Herzegovina
Innovation description	The present invention relates to a device and a method for obtaining a mixture of hydrogen H2 and oxygen 02 by the action of UV radiation on water vapor of a certain temperature; The device consists of a source of UV radiation (2); a light guide (3) through which UV radiation is directed from a UV radiation source (2) to a chamber (10) in which water vapor mixed with argon of a certain temperature is subjected to the reaction of UV rays; a chamber (6) into which water vapor mixed with argon is brought by means of an injector, the chamber (6) being located insids a chamber (10) from which ft is separated by longitudinal partitions by copper ceils with high voltage direct current pulses (9); a rotating hollow cylinder (5) along the circumference of which fibers (4) are arranged; a device for controlling the temperature of the gases (7) which enables the control of the speed of water vapor and argon as a gas (4) wherein said device (7) is located inside a rotating hollow cylinder (5); and a drain (8) for draining the gaseous 02 and H2 to the consumer. Said device and method are merit, to be used for obtaining of a mixture of hydrogen H2 and oxygen 02 for starting internal combustion engines, gas turbines, in steam generators in addition to fuel, and in a circular system it drives a turbine that produces electricity and returns the exhaust gases with water vapor to a new circular process.
Intellectual property, Patent	International Application No. PCT/BA2021/000007 Publication Number : WO/2023/279175
Estimated total investment cost	In agreement with the investor
Supporting information available	For additional information about this project, please contact FIPA either by e-mail: fipa@fipa.gov.ba or phone number: +387 33 278 080.