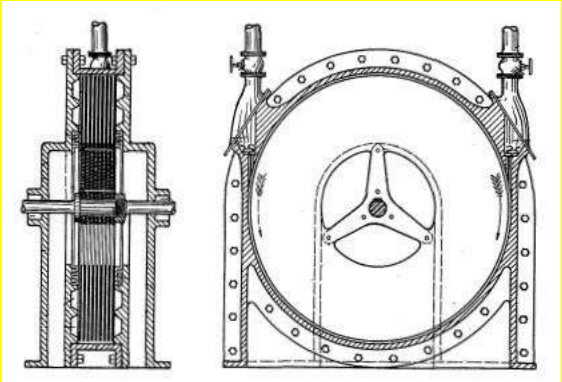

TESLA'S THREE-PHASE HYBRID INTERNAL COMBUSTION ENGINE

Project title	Tesla's three-phase hybrid internal combustion engine
Sector	Innovation Sector
Location	Bosnia and Herzegovina
Project background	A technical problem that is trying to resolve by "Tesla's three phase rotational hybrid ICE" is to construct a completely new internal combustion engine based on different working principles when compared to the current engines. This finding has become a 2nd generation engine in line with historical development and improvements of ICE engines. It is possible to utilize these engines in industry and agriculture and its mass application is expected in traffic.
Project status	The project is in the development phase
Innovation description	A completely new rotational hybrid internal combustion engine is adaptable to conditions of exploitation, easy to construct and make, with low production costs. These technical solutions enable that ONE engine can be used as an internal combustion engine in regime 1, as a pneumatic engine in regime 2, and combined in regime 3. In addition, the technical solutions and methods enable : minimization of the number of energy exhaust points and the number of moving parts; the reduction of the size of friction areas; increase of the power while the fuel consumption is reduced; achievement of high torque and the spinning speed and dynamic balance; a central computer to steer, control and protect the engine; the possibility to run the ignition process and optimize it independently of rotor's turning rate and order of chambers; optimization of the power and consumption by switching off and again on during the pneumatic work combination; increase in the efficiency, reliability and usage duration; decrease of the maintenance costs and mass per output power unit; the use of different fuel types; elimination of the complex lubrication and cooling system; the exchange of the work energy; and managing the process of combustion and expansion.
Intellectual property	Patent: BAP173184A
Inputs required from foreign partner	app. 250 000 000 EUR - Creating a prototype of motors and testing in real conditions (in the production of electricity)
Form of cooperation with foreign partner	The establishment of a joint company or sale of a patent.
Supporting information available	For additional information about this project, please contact FIPA either by e-mail: fipa@fipa.gov.ba or phone number: +387 33 278 080.